planex

www.planex.com.au

Low-Rider Caddy

Low wide wheels allow Low-Rider to slip easily under most work surfaces providing more workstation storage than traditional pedestals.

Fitted with 3 lockable drawers available in left or right hand configurations in 3 models to suit all applications: Low-Rider Classic 66 features an open space with shelf, Low-Rider Deluxe features a lockable polyproplene tambour door that slides completely across the front to hide the drawers and the Low-Rider Super Deluxe that offers an aluminium tambour door, giving you the choice of matching or contrasting the door colour perfectly to the body.

Manufacturer	Planex Sales Pty Ltd
Location	Hallam, Melbourne
Standard Warranty	Ten years

Low-Rider Dimensions

Body Type	Code	Height	Width	Depth
Classic 66	28-LRND	675	1000	500
*Deluxe	28-LPDR	675	1000	500
**Super Deluxe	28-LPDA	675	1000	500

* polypropylene door ** aluminium door

Accessories

L'Oblique AZO Drawer Files	Code	Suspension Axis	Height
Foolscap, V Base	23-FAZO39	390	250
Foolscap, 30mm Base	23-FAZO3930	390	250

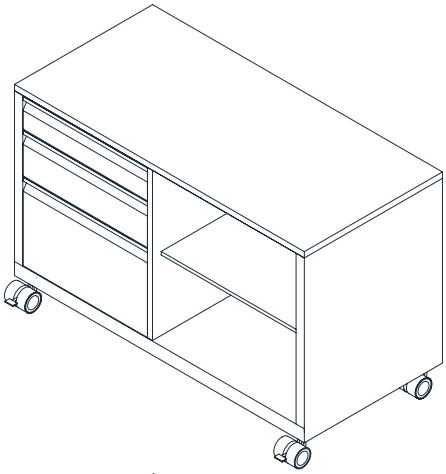

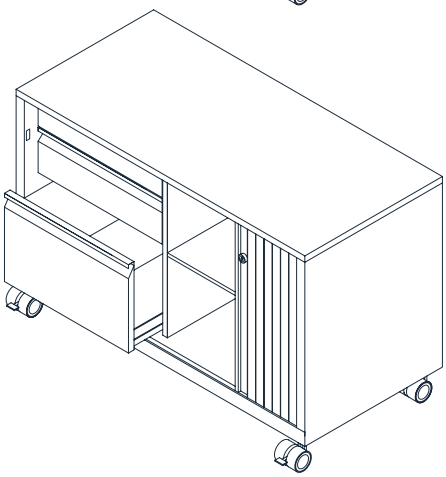

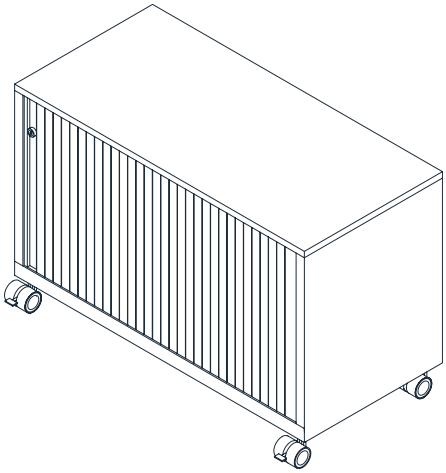

Materials

- Welded body made of 100% recyclable BlueScope sheet steel (with 24.2% recycled content)
- Polypropylene or aluminium doors available

Colours/Finishes

- Standard powder coats available in 300+ colours/finishes
- Deluxe polypropylene doors available in white, black, silver grey, post grey, charcoal and bright silver
- Super Deluxe aluminium doors available in 300+ colours/finishes

Product Features

- Drawer slides rated at 45kg per pair (full extension on file drawer)
- ¾ extension on pencil/box drawers
- European castors
- European locking system with interchange barrel locks (1000 random combinations)
- Separate locks for drawers and doors (locks can be keyed alike or keyed to differ)
- No assembly required

Accessories Ordered Separately

- L'Oblique AZO drawer files
- Master keys and option to key-alike available

Manufacturing

- Made in Melbourne, Australia using locally sourced materials
- Manufactured for disassembly
- Polymer parts labelled for segregation and sorting
- Iron phosphate pre-treatment AS2331.3.1-2001 Method 3.1
- Planex factory uses a 100Kw roof mounted solar array to provide up to 25% of manufacturing electricity needs

Environmental Certification

- Product may contribute to Green Star credit points
- Production facility certified ISO14001 and ISO9001
- VOC compliant materials

Designed by Planex

Copyright Planex 2022
Information in this document may be
subject to change without notification

Head Office / Manufacturing
191 Princes Highway Hallam
VIC Australia 3803
PO Box 125 Hallam 3803
Tel: +61 3 8795 1100
Fax: +61 3 8795 1122
Email Head Office: info@planex.com.au

National Sales and Distribution
Adelaide
Brisbane
Canberra
Hobart
Perth
Sydney
Tel: +61 3 8795 1100
Email: info@planex.com.au

www.planex.com.au